Dungeon Plungin

Game Masterless Dungeon Crawling

Version 3.8.8

Written by: Beto Francischinelli, Bobby Wallen, Shaun Austin, PJ Pieterek

© 2007-2012 Oversoul Games

Special thanks to the Play testers.

Amy Greenhill

Michael Greenhill

Dan Matheson

Jerry Hawthorne

Dewayne Agin

Jamie Shea

Without them, this would have been impossible!

Contents

Dungeon Plungin 1
Contents 2
Introduction 4
Requirements 4
Setting Up 4
Sequence of Play 5
Playing the Game 5
Stat Checks 5
Exploring the Dungeon 7
The Entry Tile 7
Opening Doors and Chests 7
The Mapmaker 7
The Plot Counter and the Time Span 7
Previously Explored Tiles 8
Leaving and Returning to the Dungeon 8
Dungeon Level 8
Construction Phase 9
1) Location Chart 9
2) Doorway Chart 9
3.1) Random Events Chart 9
3.2) Encounter Chart 10
Monster and Chest Arrangement 10
Monster Awareness Chart 10
3.3) Special Location Chart 11
3.4) Unique Location Chart 11
4) Ending the Construction Phase 11
Hero Turn 12
Actions 12
1) Nothing 12
2) Movement 12
3) Attack 12
4) Cast a Magic Spell 12
5) Activate a Special Ability 12
6) Use an Item 12
7) Detect Something 13
8) Disarm a Trap 13
9) Unlock a Chest or Door 13
Reactions 13
Optional rules for Hero Turn 13
Combat 14
Attack 14
Defense 14
Pushback 14
Fumbles in Combat 14
Character Death 15
Status Conditions 15
Optional Rules for Combat 15
Spellcasting 16
Casting a Spell 16
Spell Description 16
Overcasting 16
Resisting a Spell 16
Optional Rules for Spellcasting 16
Monster's Turn 17
Monsters Description 17
Monsters Actions 17
Monster Movement 17
Monster Laws 17
Role: 17
Preferred Target: 18

Bosses and Mini-Bosses 18
Life Chart 18
Traps 19
Detecting Traps 19
Disarming Traps....19
Some Example Traps 20
Locked Doors and Chests....21
Using Keys 21
Picking the Lock....21
Bashing a Door or Chest 21
Optional Rules for Trap/Lock Resolution....21
Treasure....22
Party Inventory....22
Gold....22
Valuables 22
Recipes....22
Properties 22
Hero Inventory 22
Equipment....22
Spellbooks 22
Keys 23
Cursed items 23
Discarding Treasure....23
Selling Treasure....23
Experience Points....24
Appendix A Play Aids....25
Map Maker 25
Plot Counter....25
How to use the Map Maker & Plot Counter Sheet....26
Flow Charts 27
Construction....27
Open Doors/Chests 27
Game Round Summary 27
Character Sheets....28
Party Sheet....29

Introduction

Remember when you were younger and role playing was simpler? You entered the dark dungeon, battled countless Monsters, and overcame obstacles and traps, found hidden treasures and powerful magical artifacts. Then you went deeper till you encountered and heroically engaged the villain. Finally you emerged triumphantly, a little richer and a little more experienced, until the next time....

Dungeon Plungin' draws on those cherished memories. Add to that a look reminiscent of the early video role playing game legends and you get a nostalgic masterpiece. The system is designed to function without the aid of a Game Master so everyone can get in on the dungeon crawling action! This is possible through a cleverly designed flow system built to be as true to a traditional RPG as possible. It is simple and fun to use. Equally as simple is the actual "play" system. Streamlined and uncomplicated to make the game move along faster, so you can explore more of the dungeon! The game uses random rolls on chart as well as some preplanned elements to make for a fun time.

The game can be played solo, or up to four players can band together and brave the dungeon!

Requirements

You will need a few items before you can start playing a game.

- **A copy of the *Rules Book*, the *Character Book* and the *Spell Book***

  The rules in Dungeon Plungin' are divided among several small books. This book contains the actual Rules to play the game. The Character book tells you how to create your Heroes and equip them before the game starts, and will probably be referenced during play only to settle doubts about Character stats and abilities. The Spell book will be useful for spell casting Heroes (and Monsters!), and talks about Spells, Crafting Potions or Magic Items.

- **A copy of the Quest Pack you will be playing**

  For each game, you choose one of the Quest Packs available for download. The Quest determines the objective of the game, what Monsters you encounter, how to construct the dungeon and which Treasures you may find.

- **The Basic Tile set (with Doors and Chests)**

  The Basic Tile set is available as a separate download because you can get white border or black border versions. It is worthwhile spending a bit of time on these to make them a bit more resilient to wear and tear. There are many options, such as mounting them on matt board or foam card. You can protect the surface with laminate or artist's fixative. If you play the game a lot, you will wear out the Tiles fairly quickly if they are just printed on paper or card.

- **Figures for the Heroes and the Monsters**

  Although most of the Quest Packs come with paper Stand-Ups (or Figure Flats) for the Heroes and Monsters, you can also use plastic or pewter miniatures if you have them.

- **A copy of the Playing Aids**

  In the Appendix at the end of this book, you'll find some useful playing aids, like Character Sheets, Flowcharts and the Mapmaker, with instructions and examples on how to use them.

- **Polyhedral Dice (D4 – D20 with lots of D6)**

  You will need polyhedral dice – at least one D4, D8, D10, D12 and D20. You will also need a lot of D6's for the main action (at least 5 to start with). Having more dice is better than not enough.

Setting Up

First, each player must create a Level 1 Hero, using the Character Book. The game is usually designed for a party of 4 Heroes, but it's ok for a player to control more than one Hero if there are less than four players.

Alternatively, you can choose some of the pre-generated Heroes found in the Character Book's Appendix, and dive right in the action! And if you played Dungeon Plungin' before, you can continue the game with the same characters: the more Quests they complete, the stronger they become!

With the Heroes ready, choose a Quest that is appropriate to the level of your Heroes. Read through its introduction and set aside any component it specifically requires.

Place the entry tile at the table and then all players take turns placing their Heroes wherever they like on the Entry Tile (usually next to a Door so you can open it and start exploring).

The players decide who goes first, and who's responsible for the Plot Counter and for drawing the Map.

Sequence of Play

Though some Quests might have specific victory conditions, the goal of the game is usually to explore the dungeon and find the Great Door, which is the entrance to the villain's lair. Players must cooperate in order to achieve this common goal - in Dungeon Plungin', either everyone wins, or everyone loses!

Heroes Turn: During a game round, players take turns, clockwise around the table, until everyone's Hero has acted. It's a good idea to have the first players be the armored warriors, to engage the Monsters in melee and protect the more fragile mages and archers, who should stay back and attack from range.

During a Hero Turn, the player may select up to two Actions. Some actions (like Attacking, Moving or Casting a Spell) can only be taken once per turn, while others (like unlocking a door) don't have that limit. See the Hero Turn section for more details.

Construction Phase: if at any time a Hero opens a Door that leads to an unrevealed room, the player's turn pauses and new tiles are added to the Dungeon. After the construction is done, play continues around the table, either with the Hero who opened the door (if he still has an Action left) or with the Monsters (if they managed to set up an Ambush). See the Construction Phase section for more details.

Monsters Turn: After all players have had their turns, it's the Monster's turn. Monsters act "on their own", according to special Laws, but players must move their figures and roll the dice for them. One single player can be responsible for the monsters, or they may be divided among all players, depending on your group's preference.

After the Monster's turn, the play goes back to the first player, and a new game round starts.

Playing the Game

Characters (Heroes and Monsters alike) rely on their stats to perform their Actions. There are 8 stats, which may range from 1 to 10, but can be further modified by special items or abilities.

Attack	**(ATK)**	physical attack power and combat expertise, both melee and ranged; modified by weapons
Defense	**(DEF)**	physical defense and ability to dodge attacks; modified by armor and shield
Magic	**(MAG)**	the character's magical ability, knowledge of arcane arts or divine blessings, used to cast spells
Movement	**(MOV)**	how many squares a Character can move on his turn
Life	**(LIFE)**	vitality, how many hits a Character can take before being defeated
Resistance	**(RES)**	vigor and constitution, used to negate poison, lift heavy objects and endure harsh conditions
Dexterity	**(DEX)**	agility, coordination and reflexes, used to handle traps, locks and complex machinery
Wits	**(WIT)**	the intelligence, perception and charisma of a Character, used to detect hidden things

More details about the stats can be found on the Hero Creation section in the Character Book.

Stat Checks

A stat check is made to determine the outcome of a particular action: players must roll a number of D6 dice equal to the stat. Every roll of a [5] or [6] is counted as a **Success**. There are abilities and special rules that may cause these values to change.

Some checks have a set Difficulty, and a Character must attain a number of successes equal to or greater than the Difficulty in order to succeed. Others checks are opposed by an enemy's roll: both parties roll the dice and the one with most successes wins the match. Some actions even give better results as you get more successes!

On the other hand, some checks can be disastrous or have unintended consequences. Count the number of [1]s you roll – these are often referred to as "failures", though they do not count against your successes. If you ever roll more failures than successes, then a **Fumble** has occurred: you exhausted yourself and loose a prepared spell, you break the lock you're trying to pick, your weapon falls from your hand, you trip and must stand up on your next turn, etc. The action may still succeed, if you managed to get all the necessary successes.

A Fumble also occurs in opposed checks if you don't roll any success.

Game Example

The following examples showcase some of the checks Heroes and Monsters will make during a game.

While exploring the dungeon, the Heroes find a Locked Door blocking their way. The Thief steps up and tries to unlock it. This type of action requires a DEX check. The Quest specifies the difficulty for this action, in this case, "2". The thief rolls his DEX (4) and gets [1], [6], [3] and [5]. The [6] and [5] count as two successes, which meets the difficulty "2" of the check, and the Thief successfully unlocks the Door.

The Thief opens the Door and the Construction Phase reveals a Room filled with Orcs! When the Thief's player rolls at the Monster Awareness chart, he discovers the Monsters were on Alert state. Now, both Thief and Orcs must make opposed checks to see which can act first (as per the rules of the "Alert" state of awareness). The Thief rolls his DEX 4 stat (which in this case measures his stealth) and gets [2], [2], [4] and [6], and the Orcs oppose with WIT 2 (representing their perception) and get [5] and [6]. The Monsters' two successes outmatch the Hero's single success, and the Orcs now get a free Monster Turn. Poor Thief!

The monsters attack and after being pummeled by the Orc ambushers the Thief crawls to the side of the party Priestess. She casts a Healing spell to bring back some of his health. A MAG check is in order: the Priestess' player rolls 6 dice for her MAG stat and gets [2], [5], [4], [1], [6] and [6]. Being a Difficulty 2 spell, only two successes would be necessary to restore 1d6 points of LIFE back to her comrade, but with her three successes she is able to restore an extra LIFE point.

When the Orcs are finally dispatched, the Thief hurries to loot their Treasure Chests. He examines them for traps, rolling his WIT stat of 3 and the dice give [3], [1] and [1]. That's two failures and zero successes! It is an unlucky day for the Thief, because his critical failure triggered a trap which blows up a fireball on the whole room!

With the whole party scorched due to the Thief's bad luck, the Priestess sighs and begins to cast the Healing Spell again (Diff 2). She rolls [1], [1], [1], [4], [5] and [6]. The [5] and [6] give her the two successes required to cast the Spell on the Warrior, however the three failures means a fumble has occurred. In this case, it means she can no longer use the spell in this dungeon. It appears the Thief's bad luck is contagious!

Exploring the Dungeon

Through a series of tables, the game will randomly generate the dungeon each time you play a different Quest. Heroes start at the Entry tile and explore from there.

The Entry Tile

The first Tile placed is the Entry Tile and there are no rolls made there. It has three other Doorways on it. Each will have an unlocked Door that is not trapped. There are no Monsters or Chests located on the Entry Tile. None of the rooms behind the Doors are revealed until the door is opened. Place an unlocked Door marker on each of the other three exits.

Opening Doors and Chests

All Doors in a dungeon will be closed the first time you encounter them. Opening a door is a free action, a part of the Hero's movement: while standing next to a closed door, a Hero needs only to state he's opening it. Once open, the door remains open, and any Character may move through it freely. Unlocked Door or Chest markers have silver handles and key holes.

Some doors and chests may need to be unlocked first, which does require an Action. Locked Door or Chest markers have golden handles and keyholes.

When opening an unlocked door, you roll on the Door Trap Chart to see if there is a trap, and if the results indicate there is a trap, you automatically trigger it. Therefore, it is good idea to try to detect traps before opening (or unlocking) a door. This allows you to "see" if there's a trap (i.e., to roll on the table) before opening the door (or picking the lock) and activate the trap. Later, once the trap has been dealt with, you can open it safely.

The same reasoning applies to opening chests: you look for a trap, disarm it, then you unlock and open the chest.

Once a door is opened, it cannot be closed again, unless a special item, spell or event says otherwise.

The Mapmaker

The Mapmaker found in the Appendix can be used to draw the dungeon and keep track of where you have been. You use symbols to map the Dungeon onto this sheet, marking down special locations, chests and doors you couldn't open, traps that are still active, or monsters you left behind. You start at the Entry Tile, which is marked towards the bottom centre of your Map. Remember to keep your Mapmaker for the next session.

The Plot Counter and the Time Span

Below the Mapmaker is the Plot counter, which keeps track of dungeon construction. Each Quest will have a Time Span composed of two numbers, which looks like this: "N (X)".

"N" equals the minimum number of Construction Phases for the Quest. During play, each time you lay a new tile, the players advance the Plot Counter by one. When it reaches "N", every time you would add a new tile, you begin adding a cumulative +1 to all rolls on the Door Chart, which will ensure the appearance of a Great Door in the next few Construction Phases. This modifier will go as high as "X". When it has reached "X", the Dungeon is considered completely explored.

Once a dungeon is fully explored there are no more rolls on both the Location and Doorway Charts: any unexplored areas behind closed doors end in a room with no other Doorways, but they can still have Monsters and Chests.

For example: The Time Span for a quest is 12(6). After playing for 12 Construction phases the players begin adding a +1 modifier to all Doorway rolls for each round played beyond the 12th (13th: +1, 14$^{th:}$ +2, etc). Even though the Heroes found the Great Door at the end of a Hallway in the 15th Construction Phase, the players decided to keep exploring the dungeon, hoping to find more treasure, before facing the Boss. However, once they have finished the 18th phase (12+6=18), the Dungeon is complete, and any unopened door will lead to a room with no exits.

Previously Explored Tiles

Instead of going through another Construction Phase, a Hero can simply move between previously constructed tiles.

Returning to a **Hallway** which already provoked Random Events doesn't cause new Events to happen – they only occur the moment the first Hero steps into the hallway, and never again on that tile.

When a Hero goes back into an already cleared, empty **Room**, there's a chance new Monsters have moved in. Monsters can only reappear in rooms that have been cleared of all Monsters: if at least one Monster is left, then nothing can reappear in that room. When you re-enter a cleared room, after you complete your movement, roll a D6: on a result of 1, roll on the Monster Chart. Monsters that reappear are always Alert and must make a detection roll.

Leaving and Returning to the Dungeon

The Entry Tile also has a special Door, the Dungeon Exit, which is marked by the two torches and the light on the floor. If for whatever reason the Heroes wish to leave the Dungeon before they complete the Quest, they can only do so through the Dungeon Exit.

Common reasons for leaving are healing or resurrection, the purchasing of new equipment, or if a game session has ended and the players must quit playing. Whatever the reason, the dungeon layout will remain as it currently is until the Heroes re-enter it, so the players must reconstruct the dungeon according to the Mapmaker's reference, instead of going through new Construction Phases.

However, all the Rooms have been repopulated by new monsters, and the traps in the Hallways have been reset. So, roll on the Encounter or the Random Events chart, as if encountering them for the first time.

Dungeon Level

As heroes become stronger, they take on more dangerous Quests. A practical measure of that danger is shown on the Quest's description, in the form of the Dungeon Level (also referred to as "Dungeon Floor" or "Quest Level"). Some rules or tables may refer to this number in order to determine a particular effect.

Construction Phase

A Construction phase starts when a Hero opens a door that leads to an unrevealed area. The player of that Hero rolls the dice in charts contained in the Quest Pack. Most charts will reference other charts, until everything that lies beyond that Doorway (Rooms, Doors, Monsters, Traps and Chests) is determined and placed on the board. The last roll is possibly on the Awareness chart, which will determine if the Monsters encountered were caught off guard or were prepared to ambush the Heroes.

The player who opened the door into an unknown area consults the charts in the Quest Pack and makes all the rolls and decisions for that phase. Each chart will indicate which dice you must roll.

The only exception is the **Great Door**. When a hero opens a Great Door, he discovers a Unique Location and must consult the 3.4) Unique Location Chart, which has its own construction rules described in the Quest.

Otherwise, begin with the Location Chart.

1) Location Chart

The first thing to discover is what lies beyond the Doorway. Is it a Room? Is it a Hallway? Roll the die and check the result on the Location Chart to see which Tile should be placed. There are three different types of Tiles:

- **Hallway Tiles** are connection Tiles and will always have Doors at their extremities even if they lead nowhere. They rarely have monsters, but strange events and traps may occur. Consult the 3.1) Random Events chart.
- **Room Tiles** are the most common in the game. Rooms can be of a variety of sizes and are listed with a number of Doors (which includes the Door you enter by). They usually contain Monsters and Treasure Chests, so you must roll on the 3.2) Encounter Chart to which how many of which.
- **Special Tiles** are preconfigured rooms that usually have some special ability. You will need to roll on the 3.4) Special Location Chart to determine exactly which Tile to place.

Try to place tiles so that doorways lead somewhere. This is not always possible so place the tile as best you can. Most Tiles will fit in a 6x6 Grid, but some of the Unique Locations are larger than this. To make everything fit more easily, try to orientate Tiles around any areas that contain 'large' Unique Locations.

If the new tile touches a wall in a previously placed tile, then you've found a secret passage between those tiles. Secret Passages are always Locked, with a difficulty to unlock equal to half the Dungeon Level.

2) Doorway Chart

After you have placed the Tile, you will determine the Doors. If you discovered a Room Tile, the Location chart will list how many doors you'll be placing. If it lists only one Door then it is the door you have just opened, therefore you have reached a dead end and there is no other exit from the room. Hallway Tiles automatically have a door at each end, so Corners have 2 Doors, Halls have 2 Doors, T intersections have 3 Doors and X intersections have 4 Doors.

Doors appear at the end of each corridor, and in the center of a wall. Only one Doorway can be present on any wall. The player controlling the construction phase decides which walls contain this Tile's Doors, and places the corresponding Door Marker.

Consult the 2.) Doorway Chart adding to the roll any modifier from the Plot Counter (if you already reached the minimum number of Construction Phases for the Quest, you'll be adding a cumulative +1 to these rolls). Do this for each Door in the tile, and place the corresponding Door Marker. The Chart lists three types of Doors:

- **Normal Doors** must be opened before you can pass through them but they are never locked or trapped.
- **Locked Doors** may also be trapped. You will need to detect and disarm the trap before you can unlock the Door. You also have the option to force the door open if you fail to unlock it.
- **Great Doors** marks the entrance to a Unique Location, a place of great importance to the Quest. When a Great Door is discovered it is always locked, and always trapped. They cannot be affected by any magic. It cannot be opened with a common key: a Hero must possess a Great Door Key in order to open it. Although it cannot have its lock picked, the Great Door can be forced open.

Once opened, doors can only be closed by special items, spells or events.

3.1) Random Events Chart

When the first Hero enters a Hallway Tile, roll on the 3.1) Random Event Chart. Random Events represent the whims of luck while exploring a dungeon. Typical Events include wandering monsters, traps, hidden treasure, a secret door, etc. Each Event on the chart has a full description with it.

Events must be resolved as soon as the Hero takes his first step into the Hallway. It is possible for a Hero to open a door, reveal a Hallway, and then decide to remain in the previous tile. In cases like this, you must wait until any Hero

steps into the Hallway before rolling on the Random Event chart.

After an Event is resolved, the Hero's Turn resumes (some traps may end the Hero's Turn prematurely, though).

When a Random Event provokes a trap, it cannot be detected first, and it is immediately triggered.

Not all Events are applicable in every situation. If the results indicate a Random Event that is not possible for any reason then ignore the event.

3.2) Encounter Chart

If you placed a Room Tile, consult the 3.2) Encounter Chart to find if there are Monsters, Treasure Chests, or both.

Chest results also include how many are in the room, and the difficulty to detect traps and unlock them. Roll a die on the 3.2.1 Chest Chart to determine whether Chests are locked or not. Use a gold Chest marker for locked Chests and a silver Chest marker for unlocked Chests.

If you get a Monsters result, you roll on the 3.2.2) Monsters Chart to determine the type and number of Monsters.

For example: The encounter result is *"Monster & Chest (2) Dif: 1"*. The player rolls twice on the Chest Chart to see if either Chest is locked, and finds that only one of them is. Next, the player rolls on the Monsters Chart, to see who is guarding those chests, and gets the result: *"3 Ghoblins and 1 Orc"*.

Monster and Chest Arrangement

In order to place monsters and chests on the board, roll 2 dice. The type of dice will depend on the Tile.

The Tiles are specifically designed to match with common polyhedral dice. Each square on a Tile is considered to be coordinated from the top left corner square. That square would be (1,1) and if this room was 6 squares by 6 squares, then the square farthest away in the lower right corner would be (6,6).

To place a Monster or Chest roll the corresponding dice and place it at those coordinates. Do this for each Monster and Chest appearing in the room

For example: in a 6X6 room, roll two D6. If the results are a 4 and a 6, then you place the Monster or Chest in the square with the coordinates (4, 6).

No miniature can occupy the same square: if a coordinate indicates a square currently occupied by a previously placed Chest or Monster, the new miniature will be placed in one of the 4 adjacent squares of the player's choice.

Chests can never occupy a square in front of any Doorway, blocking their passage and neither Chest nor Monster can occupy the square in front of the Doorway in which the Heroes will enter.

Monsters will always face the door you are entering. They will either turn that way when you open the door or they will be waiting for you (depending on their state of awareness). Monster facing usually has no effect on the game (Characters are fully aware of their surroundings) unless a specific ability, trap or spell says otherwise.

Monster Awareness Chart

Finally, if you encountered Monsters, you must determine their awareness state. Roll on the 3.2.3) Monster Awareness Chart, adding +1 to the roll if you there was combat with Monsters in an adjacent room, during the previous turn. Possible states of awareness are:

- **Sleeping:** The Monsters will not act unless awakened, skipping their actions in the Monster's Turn. All monsters awake if a trap is activated, a monster is attacked or a spell is cast. Even if awakened, they will not act in the next Monster's Turn, while regaining their senses (consider that their Awareness state changes from Sleep to Unprepared).
- **Unprepared:** The monsters were caught off guard and will not act in the next Monsters Turn. They notice you're there, but they were doing chores, didn't have time to unsheathe their weapons, are waking up or having a quick panic attack, etc., so they can't act right now... but they will be ready soon. Note that if it was the first Hero in the game round who opened the door, the players will have two whole rounds before the Monsters can react!
- **Unsuspecting:** this is the most common state. Heroes resume their turns after opening the door and play continues normally. The Monsters only act on the next Monster's Turn, at the end of the round.
- **Alert:** The Monster with the highest WIT must make a WIT check, with a +1 bonus if there was combat in an adjacent tile. The Hero with the lowest DEX in the adjacent tile makes a DEX check. If the Monsters roll higher, then they are prepared and gain an extra turn (as if you rolled for an "Ambush").
- **Ambush:** The Monsters in the Room have set up an ambush. The Hero who opened the door looses any remaining Actions, and the Monsters gain a free turn before the Heroes resume theirs. Only the Monsters in the new Room benefit from this extra turn: the Monsters who were already on the game will only act on the next Monster Turn, after the last player in the round has taken his/her turn. Note that if it was the last Hero in the round who opened the door, the Monsters can take two turns in a row!

3.3) Special Location Chart

A special location is a type of room with specific rules that relate to the Quest, but which may appear multiple times in a single Dungeon. They are preplanned so you do not roll for Doors, Monsters or Chests. They usually have an effect that can be used once per Hero.

When a hero opens a door and reveals a Special Location, the player must consult the 3.3) Special Location Chart. These are sample Special Locations found in the Basic Tiles, which appear on many dungeons:

Fountain of Healing

This room is 6X6 and in the center of the room is a large tranquil fountain. Once per visit to this room any Hero, who moves onto a fountain square, may use an action to drink from it. Any Hero drinking from the fountain is affected as if they had just had a Pulse spell cast upon them and immediately have 1d4 hits returned to them up to their current maximum.

Fountain of Healing Rooms never have treasure Chests but can have Monsters. Ignore any results for Chests and keep the results for Monsters. Proceed as normal.

Sarcophagus of Reviving

This 6X6 room contains a large ornate stone sarcophagus in the center of it. Any Hero killed during the game may be placed inside and restored to life. The Hero emerges from the sarcophagus at the beginning of the next round with 1 LIF. A sarcophagus may only be used once per Hero in a game.

A Sarcophagus of Reviving Room never has treasure Chests but can have Monsters. Ignore any results for Chests and keep the results for Monsters. Proceed as normal.

3.4) Unique Location Chart

Whenever a hero opens a Great Door, he skips the Location Chart and automatically discovers a Unique Location. He must consult the 3.4) Unique Location Chart, which may use a die roll, like the other charts, or it may list the Locations in a preset order. Unique Locations are completely individual to the Quest. Like a Special Location, they are pre-planned Rooms, so you do not roll for Doors, Monsters or Chests – these details are always informed by the Quest. Unique Locations affect the course of the game: it may contain a boss or any equally important milestone.

The following is an example Unique Location, which can be found in the Quest *"The Knocking Wall"*:

Eye of Doom

The Eye of Doom is the base of the old tower. A minor demon has been using the building as a location to hide while becoming more powerful. He and his minions have been performing evil augmentation rituals and stealing treasures from the local population. In his possession is the sacred staff from the Fainsworth shrine. He is using the staff to boost the power of his rituals and this is the origin of the strange knocking noise late at night. He must be stopped, before he gets too powerful!

The Eye of Doom tile is a 6 by 6 room with an "eye" symbol in the centre. There is only one entrance to this room which is the Great door you enter by. The Demon figure is located on one of the Eye squares in the centre of the room. Four Gremlins are also in the room, roll for their locations as normal. The Monster awareness is unsuspecting.

You must defeat the Demon to retrieve the sacred staff. This will be proof you have defeated the evil and earned your gold. Killing all the Monsters will end the Quest You discover a secret exit in the room that allows you to return to the village without backtracking through the dungeon.

4) Ending the Construction Phase

After the Construction Phase is over, the player in charge of the Mapmaker records the room in the map, and advances the Plot Counter by one. The play proceeds with the player who opened the door or according to the result rolled on the Monster Awareness Chart.

Hero Turn

This is when the all the action happens. During a **Hero Turn** each player will have his or her Hero explore and interact with the dungeon in some way. This is usually done by selecting Actions and making checks to see if you succeed.

On a given turn, a Hero can perform 2 Actions. After a Hero expends his or her allotment of Actions for the Turn, play passes to the player to his left (or to another Hero that the player controls, which hasn't acted on this Turn yet).

After all Heroes have taken their Turns, it's time for the Monsters Turn. Monsters act very much like Heroes, with 2 Actions each, but they are controlled by predetermined Laws. See the Monster section for more details.

Actions

Heroes and Monsters can do several things on their turn, usually one Movement and some other Action, like attacking or casting a spell. They can also opt to do nothing at all. Any Action can only be performed once per Turn, unless specified otherwise.

The following actions are available to all Heroes. Monsters can use most of them, but see the Monster's section for complete information.

1) Nothing

When a Character opts to do nothing, they forfeit their turn and the next Character begins his or her turn. You can do "nothing" with one or both of your Actions.

2) Movement

Characters use this Action to move a number of squares up to their Move stat. They cannot split their movement in two, with an Action in between. They also cannot move diagonally between squares or through closed Doors, Chests, squares occupied by other Characters, or any other obstacle that specifically says it blocks movement. Some traps and Random Events may also restrict movement (as defined on each Quest), but these restrictions do not include other actions and Special Abilities that result in movement.

For example: The Thief with MOV 4 can move 4 squares on his turn, but he has the *Nimble* Special Ability, which allows him (as long as he is at maximum LIFE) to move again, another 4 squares, after his Actions for the turn are completed.

3) Attack

A Character can try to attack another. The attacker rolls his ATK and then the defender must roll DEF and get a number of successes equal or greater than the attacker's successes. If you roll a fumble while attacking or defending, you may receive a penalty or your equipment can break.

See the Combat section for more instructions.

4) Cast a Magic Spell

A Character with a spell may attempt to cast that spell as one of their Actions. To cast a spell, the Character rolls his MAG stat, and must obtain a number of successes equal or greater than the level of the spell. A fumble while casting the spell typically erases it from the spellcaster's memory.

See the Spellcasting section and the Spell Book for more details.

5) Activate a Special Ability

Some Special Abilities must be used in place of an Action, as listed on its description. Special abilities that use an Action to make an Attack, count as an Attack Action (this means you can't use the Charge Ability and make another Attack at the same turn).

See the Character Book for a list of Special Abilities available to Heroes.

6) Use an Item

A player may opt to use an item as an action, like a key to unlock a Door or Chest, or a magic item. When and how an item is used will be under its description.

You can also use this Action to give an item to another Character, as long as you are adjacent to each other.

If a Character carries a second weapon in one of his Inventory slots, he can switch them as an Action. Whichever weapon the Character is currently armed with gives his current weapon bonus and any other effects listed in the weapon's description.

7) Detect Something

As an Action a Character can attempt to investigate an object, usually a Chest or Door, to try and determine whether it is trapped. Some Quests may have specific items that can be searched, such as a bookcase or a weapon's rack. A Character may also search for something that is hidden or concealed, but these are Quest specific and all rules pertaining to them are found with that Quest.

To make a Detection check, roll a number of D6s equal to your WIT stat. The difficulty of the check (the number of successes you need) depends on the object and its quality, as noted on the charts from the Construction Phase, or from the Quest description. A fumble usually has no consequences.

A Character may not search the same item more than once, unless he is looking for something different (the Quest will specify if this is possible). You can only inspect one item per Detection check.

The most common use of this Action is to Detect Traps (see the Traps section).

8) Disarm a Trap

Once a trap has been discovered (but not triggered) a Character can attempt to disarm it. Each trap on the Door or Chest Trap charts will describe what is necessary to disarm it, usually a DEX check. You can try again if you fail, but the difficulty increases by +1. A fumble will trigger the trap.

See the Traps section for details.

9) Unlock a Chest or Door

A Character can open a Normal Chest or Door as part of his movement, as a free Action. However, if the Door or Chest is locked, he must use an Action to unlock it. There are several ways to do this: using keys, picking or even breaking the lock!

See the Locked Doors and Chests section for details.

Reactions

Reaction is the term given to special actions taken outside of your turn, like counter attacks. Only spells and Special Abilities give access to Reactions. Characters can only perform one Reaction in between their turns, even if the opportunity to use them comes a second time.

Note that abilities with a continuous effect are not Reactions; they function regardless of the Hero activating them.

For example: If you have the Counter Attack Special Ability, you can only counter one attack, no matter how many Monsters attack you until your next turn comes up, and if you use your Reaction to Counter Attack, then you can't use another Reaction ability (like using the Special Ability Attack of Opportunity). On the other hand, a Magic Shield spell, which lasts until all enemies in the Tile are defeated, will grant a DEF bonus against all suffered attacks.

Optional rules for Hero Turn

Free Hero Order: Instead of going around the table, players may decide among themselves which one acts first, but they cannot split their turn (ex.: one Hero uses his first action, then let another Hero take his turn, and then resume the first Hero's turn with his second action).

Combat

It's not a dungeon crawl if you can't hack-n-slash monsters!

In combat, there are two types of attack, melee and ranged.

A **melee attack** can only be used to attack a Character in one of the 4 squares adjacent to the attacker. Some melee weapons may have extra reach and be able to attack the four diagonally adjacent squares as well (e.g. Spears). Successful melee attacks pushback the defender, regardless of damage.

A **ranged attack** can target a Character from a number of squares away. Each ranged weapon will have its range in squares listed with it on the **Item List**. When counting range begin in the square adjacent to the attacker on the side nearest the target. You can only count adjacent squares in as straight a line as possible to the target. The total number of squares to and including the target's square must be equal or less than the range of the weapon. Only Walls and doors block line of sight for ranged weapons – not Monsters, Chests or Heroes.

Heroes attacking without a weapon follow the same rules as melee combat.

Attack

When you use an Action to make attack against another Character, you roll a number of d6s equal to your Attack stat plus the **Weapon Bonus**. The Weapon Bonus of a weapon looks like this: "+1". Add up the total amount of success to see how many hits the target received. If a Character is hit, he is also Pushed Back (see below).

For example: A Hero with ATK 4 wielding a Sword (+2) rolls 6d6 for the attack. Every 5 or 6 rolled counts as a success. If the Hero rolls [1], [5], [5], [3], [4] and [3], he scored two hits against the target.

Defense

A Character reacts from an Attack by making a Defense Check. The target of an Attack rolls a number of D6s equal to their Defense stat plus their armor and shield's **Armor Bonus**, which looks just like a Weapon Bonus (i.e., "+1", "+2").

As with an Attack, any die showing a 5 or 6 counts as a success. The total number of successes a player gets on a Defense roll is subtracted from the total number of successes on the attack roll. Any remaining successes of the attacker that were not canceled by the defenders successes is the amount of **damage** the Character takes and is subtracted from the Character's Life stat.

Pushback

When a Character is successfully hit, that Character is **Pushed Back** by the attack, whether he sustained damage or not. The Character is moved away from the attacker by one square.

The attacker is then able to **Follow Up** into the open space as a free action if he or she chooses. Monsters refer to their Monster's Law to determine whether they will follow up or not. Characters may also follow up if the opponent dies from the attack.

Only melee attacks cause Pushback.

A Character cannot be pushed back through an occupied square: anything blocking the movement of a Character stops the pushback.

For example: An Orc Chieftain receives 5 hits from the Warrior's attack, but negates 3 of those with a defense roll, sustaining only 2 points of damage. The Orc is also pushed back 1 square away from the Warrior, who chooses to follow up into the vacated space, placing himself between the villain and his companions.

Fumbles in Combat

If a Character rolls a fumble while making a Defense check, he is **Stunned** and loses one of his next Actions. While trying to defend himself, he may have dropped his weapon and will use his next action to pick it up. Maybe he has put himself in a disadvantageous position. Perhaps he tripped on his cape, his helmet turned on his head, his shield dropped, or the force of the blow dislocated his shoulder. Whatever the reason, the defending Character's next Action is lost as he recovers.

While Stunned, a Character may not activate any reactive abilities or cast reactive spells until he can act again. Abilities already activated function independently and work as normal.

Attack roll fumbles do not cause adverse conditions. However, some items, spells or other special conditions (like Weak weapons, see below) may change the effect of a combat fumble, and provoke another type of penalty. Some of these conditions may replace the Stunning penalty, while others may stack with it. Fumbling does not negate successes.

Weak Items

Some pieces of equipment are fragile or made with inferior materials. They are marked with the “weak” keyword on the Item List. When using a weak armor or a weak shield, if the Character rolls a fumble during a Defense check, one of his weak defensive items is destroyed. Likewise, weak weapons are destroyed on a fumbled Attack check.

For example: A Hero with DEF 2, wearing Leather armor (+1) and carrying a Wooden Shield (+1, weak) has a total of 4d6 on his Defense Check. He rolls and gets [1], [1], [2] and a [6] for one success. If the attacker had obtained two successes on his Attack Roll, the Hero would sustain 1 point of damage and subtracts it from his Life stat. Notice that he also rolled two failures – which is greater than his single success, so his weak Wooden Shield is destroyed.

Character Death

If a Monster’s Life stat is reduced to zero then the Monster is removed from the game. Dead Monsters award Experience Points and some also give Gold coins. See the Treasure section for details.

If a Hero is reduced to zero life then he is dead. That doesn’t mean he is gone! It is assumed that dead Heroes are somehow carried along with the rest of the group.

Dead Heroes can be revived by a potion or a spell. The revived Character returns to the game in a square adjacent to the Hero who raised him. Some Special Rooms, like the Sarcophagus of Revival, grant special effects that can raise dead Heroes. In that case, one of the living Heroes must be in the room, and adjacent to the Sarcophagus.

Heroes can use items from their dead comrades, but cannot use their weapons, armor or spells.

If you exit the dungeon with a dead Hero, you can buy a potion to revive him, but you don’t have to: you can just create a new character to join your party. All his equipped items are discarded: it is assumed you have sold the original Hero’s items to pay for a burial, and maybe entice the new Hero to join your party! The newcomer joins at the same level as the Hero with the lowest level.

Status Conditions

Conditions are effects which may be applied by the use of items, spells or special abilities a Character possess or from traps and Special Locations. Conditions that are caused as secondary effects of damage dealing abilities or spells do not apply if the character managed to prevent all damage from that source (note that in some cases it’s the damage that is the secondary effect).

Unless stated otherwise, they only last until the Characters next turn ends and they never stack: whenever a Character receives the same condition twice, ignore its second application. Note that some may have additional prerequisites to fulfill (ex.: being Frozen gives Paralysis, but never to those resistant to Ice damage)

Optional Rules for Combat

The following rules alter some aspects of combat, adjusting the game to your group’s play style. All players must agree to use any one (or more) of these options *before* starting the game or even before creating the Heroes.

Facing: attacking an opponent from behind him gives you a +1 bonus to ATK. A Character may freely change its facing during a movement or at the end of its turn (unless unable to move).

Cover: when a character makes a ranged attack that passes through a space occupied by another Character, the target receives a +1 bonus to DEF.

Overwhelmed: Characters surrounded by two or more opponents receive a -1 penalty to DEF.

Faster, Bloodier Combat: when attacking, count 4, 5 and 6 as Successes. Any other roll remains the same. This applies for both Monsters and Heroes.

Disengage: when Characters start their turn adjacent to an opponent they can only move 1 square.

Ranged Attack/Spells in Melee: When adjacent to an opponent, Characters cannot make ranged attacks and can only cast spells that target adjacent Characters.

Ranged Attack Fumbles: A fumbled ranged attack automatically miss, and targets a random Character (Hero and Monster alike) chosen among those in the attack’s line of effect and those adjacent to the intended target.

Stun (Variant): A stunned character must use an Action to make a diff 3 RES check to recover. On failure, the character remains stunned and can’t act on that turn. Regardless of the outcome, stun only lasts for one round.

Stun (Variant 2): As above, but the stun effect lasts until the character succeeds on the RES check.

No fumbles in combat: Unless a special effect is in place, ignore the rules for fumbles.

Tougher Characters: Heroes and Monsters gain +1 extra LIFE for every 3 levels (starting at +1, with a maximum of +4 at level 10). Consider combining the Faster, Bloodier Combat option rule with this one, if you think the battles are taking too long.

Spellcasting

Heroes with the Magic School special ability earn the power to cast magic spells.

Upon taking the Magic School ability, Heroes receive their first spell. Later, they can purchase new spells in town, or they can find spellbooks as part of the treasure during Quests. There is no limit to how many spells a hero can purchase.

Before entering the dungeon, Heroes must select their spells: they can prepare a number of spells equal to their MAG stat, selecting among the list of spells they know. Only these spells can be used during their time in the dungeon.

Casting a Spell

To cast a spell, a Character must make a MAG check: the player rolls a number of D6s equal to the Character's Magic stat, and any die showing a [5] or [6] counts as a success. To be successful, the check must meet the difficulty of the spell being cast. With a successful casting, the spell takes effect, according to its description. Some spells may grant additional benefits the more successes the caster scores, while others can only be augmented by setting a higher difficulty before making the MAG check.

A Character can cast any spell they have prepared as many times as they like in a Dungeon, but it is wise to prepare the same spell two or more times because getting a Fumble when you cast a spell means you exhausted your energies during the casting, and the spell vanishes from your memory, becoming unusable for the rest of the game. You recover all your prepared spells with no cost when you leave the dungeon and take a rest back in town.

Spell Description

Each spell described in the Spell Book has the following entries:

- **Difficulty**: the number of successes needed to cast the spell, according to which School you learned it from.
- **Range:** how far the spell can reach, counted in squares, just like with a ranged weapon.
- **Target:** who or what the spell can be cast upon. It could be you, another Character or object, or an area (like a tile, or a certain number of squares) and any object or Character on them.
- **Duration:** how long the spell lasts.
- **Effect:** what the spell does to the target.
- **Cost:** the gold value required to purchase the spell.

Overcasting

Heroes can try to augment their spells into more powerful versions. This is called **overcasting**, and must be declared by the player before rolling for the MAG check. Only some spells can be overcast, as noted on their description.

When a Character chooses to overcast a spell, he deliberately increases the difficulty of the MAG check to cast it. If he meets the increased difficulty, the spells effects are more potent and lasting.

But a fumbled overcast wields severe consequences: the magic energy overflows and burns the caster. The caster takes damage equal to the overcast difficulty of the spell – and some spells may even incur heavier penalties!

Resisting a Spell

Spells that cause damage usually allow a Defense roll to mitigate its effect. Reducing the damage to zero in this way usually prevents any secondary effect from affecting the defending Character.

Certain spells will allow the target to make a stat check in order to resist its effects. These are normally mind controlling or altering spells. If this check is successful the spell fails to work, but otherwise it takes effect as normal.

Some spells with duration allow extra rolls at the end of the affected Character's turn to overcome the spell's effects: if the check fails, the Character can try again on his next turn. If it succeeds, then the effect ends.

Optional Rules for Spellcasting

Fire and Forget: this optional rule mimics the spellcasting system of some traditional RPGs. When using this variant, once a spell is cast it is erased from the caster's memory, until he or she exits the dungeon and rests in town (as if he had rolled a fumble). However, these spells are much more potent: instead of making a MAG check to cast the spell, consider the caster rolled all dice as successes. Therefore, any spell is automatically in overcast mode (if available). Note that some Special Abilities may not play well with this variant.

Monster's Turn

Monsters are the enemies and opponents the Heroes face in the dungeon, be it Orcs, Ghoblins, Trolls or Dragons – even wild animals and human enemies (like evil sorcerers) are called Monsters in Dungeon Plungin.

During the Monster's Turn, all opponents on the board will take their Actions, one at a time, until all have acted.

Some traps, events, spells or quests may also require you to perform a task during the Monster's Turn, like advancing a time counter or making an Attack roll against all Heroes in the Spear trap's area.

Once all Monsters have acted, a new game round begins, starting with the first Hero's Turn.

Monsters Description

Monsters are portrayed by the same stats that Heroes have. However, they are not built by the same rules, and may have abilities or spells that are unavailable to Heroes.

Some humanoid Monsters like Orcs and Ghoblins, may use weapons or wear armor, but they already have equipment bonuses factored into their ATK and DEF stat, so you don't have to worry about those. Unless otherwise stated in the Monster's description, none of its equipment can be used by the Heroes.

There are monsters which can make melee attacks using their claws or teeth, and some may even have natural ranged attacks, like spitting poison. They may have hard scales to protect them, and some are ethereal or made of stone. All these things are considered in their stats.

They also have additional entries that describe them:

- **Level**: used to compare a Monster's relative power to another, Level rarely has any effect on the game.
- **Law:** the way monsters move and behave during their turns (see below).
- **Experience:** how many Experience Points (XP) one unit of the Monster awards the Heroes when defeated.
- **Gold:** some Monsters may carry gold coins or valuable objects, which are gained by the Hero who dealt the killing blow to the Monster.
- **Treasure:** some special monsters may also carry items, which are given to Heroes with their Gold.
- **Attacks:** describes the main attacks used by monsters, and any effects caused by them. They may be Melee or Ranged, and unless stated otherwise, require an opposed DEF check to defend against.
- **Powers/Spells:** the special attacks and abilities of Monsters

Monsters Actions

Like Heroes, Monsters get two Actions each turn, but they have no need to detect traps or unlock chests. The player who controlled the previous Construction Phase must move and make all the rolls for any Monsters until the next Construction Phase.

Monster Movement

Monsters do not open doors and will ignore whatever is behind them. They are however aware of anything they can reach by movement, following a path that is up to two Tiles away from their position (no matter the number of individual squares). Monsters will pursue Heroes in that range according to their Laws, but only as long as the path is not "blocked" by a door or other obstacle that prevents movement. Remember that, once opened, doors can only be closed by special items, spells or events.

Monster Laws

Monsters do not have an intelligent player to decide what they do and when they do it. Instead they rely on a series of preplanned methods called Laws to function.

Laws are written by combining two keywords: Role and Preferred Target.

Role:

Melee – move closer to its preferred target until it can make a melee attack; monsters under this Law will always Follow Up when scoring a Pushback. This is the standard behavior of most monsters.

Ranged – move away to the farthest square possible, where it is still in attack range of its preferred target.

Special – some Monsters follow more complex attack patterns. Their actions change according to some circumstances, or require that, at the start of this Monster's Turn, you roll on a chart found in its description to determine its action, and move it accordingly.

Wait – does not act until provoked, targeted or damaged, which will change its Law to a different one.

Preferred Target:

Nearest – this is standard for most monsters;

Determined – it will always attack the same target it attacked last time. The first target is usually the nearest.

Lured by (stat or concept) – targets nearest hero with high/lowest stat (Low Life, High MAG, Low DEF) or concept (elf, Light magic School, etc);

Pack – attacks a Hero already adjacent to another Monster. Some monsters specify if it must be another monster of the same race (i.e. pack of wolves) or any monsters;

Frenzy – chooses a random target it can reach;

Dumb – the players may decide which Hero the monster targets;

Revenge – targets the last hero who hit the monster;

Relentless – the monster will leave its tile and follow the closest Hero throughout the entire dungeon, no matter how many tiles apart they are, unless blocked by a door.

If unable to fulfill its Law, a Monster will default to [Melee Nearest]. For instance, if the Heroes encounter a group of Wolves [Melee Pack], one of them will lead the attack against the Nearest Hero, and the pack will follow suit. If the beasts defeat that Hero, then they will choose the next nearest Hero to attack.

It's possible to combine multiple keywords in a single Law, and some conditions may change the Monster's current Law. For instance, a sleeping Vampire may start with [Wait], and become [Melee / Lured by Low LIFE] as soon as he is disturbed! From then on, the bloodsucker will hunt down the Hero with the lowest LIFE it can reach. The big, stupid, Ogre may be goaded to attack whoever shouts at it, but a powerful strike (dealing 3 or more hits) can enrage it, and change its Law from [Melee Dumb] to [Melee Revenge].

Bosses and Mini-Bosses

Bosses and Mini-Bosses are normally Unique Monsters that do not usually appear on the Monster Type Chart. They are usually in Unique Location rooms, placed during the Construction Phase. Both have laws associated with them and some have special laws that appear in the Quest.

Bosses and Mini-Bosses do not have a Life stat like other Characters. Instead they have a **Life Chart**.

Life Chart

A Life Chart ensures that no player knows exactly how much damage it will take to remove a boss or mini-boss from the game. When a boss or mini-boss takes damage, the player whose Hero caused the damage, rolls on the Boss's Life Chart adding the Damage to the result.

For example: the Warrior causes 3 points of damage to the Orc Leader, which had already received other 2 points of damage, for a total of 5. The player then rolls on the Life Chart for that boss and the die shows a [4]. The player checks the Chart for a result of 9 ([4]+5), but that's not enough to kill the Orc Leader yet.

Traps

A trap is a one-time problem for the Heroes. Traps are commonly located on Doors and Chests, but Random Events may also include traps. When triggered, they take effect immediately. A trap is activated when a Character opens a Chest or Door without having detected and successfully disarmed it first.

Traps can have a variety of effects, and they may affect only the Character who activated it or all others nearby. The Door Trap and Chest Trap Charts will describe which traps are found in the dungeon, and under which conditions.

Random Events may also provoke traps. In this case, the trap cannot be detected first, and it is immediately triggered. If it remains in the game after that, only then it may be disarmed.

The most basic trap is an attack against one or more of the Heroes. This is resolved like a normal attack and the Heroes get to roll Defense against it. Some traps may require other types of checks and any number of successes. For example, a falling rocks trap may require the Hero to roll RES and get two successes or suffer 3 points of damage.

A hidden trap is activated when a Hero Fumbles either to Detect it or to Disarm it.

Anytime Heroes are aware of a trap, they get an extra +1 die on any roll allowed to avoid its effects. This is valid both for detected traps and for traps that stay in the game for more than one turn and may be activated again (like a buzz saw traveling along a corridor). If, though you fumble, you also succeed (i.e. get enough successes to achieve the difficulty, but get too many [1]'s) then you get +1 die to avoid its effect.

Some traps have specific rules and may require a sequence of events to be completed. If a trap has a continuous effect, like for instance, a slowly expanding pit which removes one row of squares from the tile each round, then it "activates" at the end of the round, after all the Monsters have taken their turns.

Detecting Traps

To find a trap, a Character must use an Action to inspect the Door or Chest and make a Detection check.

When you roll a Chest result on the Encounter Chart, it will list the Difficulty to detect a trap on a Chest, while the Door chart will list the Difficulty to detect a trap on a Door.

If the Detection check was successful, you can roll on the Door Trap or Chest Trap Charts to determine if/and what type of trap is in place on the object, without triggering it. Mark the trap on the Map Maker.

If you failed the detection check, then the Hero believes there's no trap to be found, and this Hero can't try again, unless he tries a different approach (like using a spell or an item). Other Heroes can attempt the search, if he still can't find anything. You can still attempt to open Doors or Chests without knowing if they are trapped, but if they are, then you automatically suffer the consequences.

A Fumbled Detection will activate any existing trap, which will take effect immediately

For example: A Hero with WIT 2 attempts to detect if a Dif: 1 Chest is trapped. The player rolls the dice and scores a 3 and a 4. The Character did not detect a Trap and cannot try again. Then, another player tries with his Hero and rolls a 6 and 2 - success! Rolling on the Chest Trap Chart, he gets a 6 and discovers the Chest has a Poison Needle trap. Since he discovered the trap before opening it, he can try to disarm it, or leave it behind. If he eventually triggers the trap, he gets a +1 bonus to the RES check made to avoid it.

Disarming Traps

The trap's description shows the difficulty and which stat is used to disarm it. Mechanical traps usually need a DEX check to disarm, while magic traps may need a WIT check.

On a successful roll, the trap is safely disarmed.

If the roll fails, then the trap is not activated, but each further attempt to disarm that same trap adds +1 to the difficulty of the check, regardless of the Hero trying to disarm it.

A Fumble will activate the trap, taking effect immediately.

Once a trap is triggered the object is no longer trapped.

For example A Chest has a Swinging Axe trap that is Dif: 2 DEX to disarm. The Hero has a DEX of 3. He rolls a [1] and two [5]s, successfully disarming the trap, without taking any damage from it and now the chest may be safely unlocked.

Some Example Traps

Poison Needle – Dif. 1 WIT

A small barb is hidden within the lock ready to prick an unwary adventurer. A WIT check is figure out how to disarm this trap. Once triggered, the needle makes a 3d6 attack roll against the hero opening the chest or door. The hero rolls RES in place of DEF, but if he suffers even one point of damage, he is weakened by the poison: until he leaves the dungeon, or heals at least 1 point of LIFE, he suffers a -1 penalty on all stats.

Swinging Axe – Dif. 2 DEX

A huge axe or scythe is released from the ceiling, and cuts an arc above the Heroes head! Make a 5d6 attack roll against all Characters in a line of 5 squares, positioned with the Hero who sprung the trap in the middle square. Roll 1d6: on an even number, it passes horizontally; an odd result it passes vertically. Each Hero in the axe's trajectory rolls DEF as normal.

Spear Trap – Dif. 2 DEX

Concealed on the floor, a pressure plate triggers a mechanism which shoots several sharp wooden spears upwards under the unwary adventurer. The Spear Trap makes a 5d6 attack (no defense), but it may be dodged entirely with a Dif.1 DEX check. The trap affects a 2x1 square area (adjacent to the door, so it "blocks" a corridor), under the Hero which sprung this trap, and is triggered again anytime a Hero enters that area. It can be disarmed later with a Dif. 2 DEX check, from any square adjacent to the trap.

Falling Rocks – Dif. 2 DEX

The ceiling collapses and loose rocks fall on top of the Heroes. This trap affects the Hero who triggered the trap and also all Characters in a 2x2 square area, Monsters included, dealing 3 points of damage (a Dif.2 RES check reduces the damage to 1). The fallen rocks block passage, and no Character may enter the affected squares for the remainder of the game.

Pit Trap – Dif. 3 DEX

With a wrong step, a mechanism opens a pit under the Hero, and he must act quickly to jump to safety. The trap affects all Characters in a 2x2 area under the Hero, and everyone inside must make a Dif. 3 DEX check to jump to an adjacent square of his/her choice (randomly determine which square for any affected monsters). Failure causes the Character to fall, suffering 1 point of damage and becoming trapped inside the pit. Characters inside the pit can only attack each other, and must use an Action to climb out. The pit cannot be closed and must be recorded in the MapMaker.

Explosive Runes – Dif. 3 WIT

A hidden magic rune explodes in burning flames across the entire room. Roll 5d6 against every Character in the tile (including Monsters, if any), which can resist the heat or roll for cover with an opposed RES or DEX check (use whichever stat is higher). Each success in favor of the trap causes 1 damage.

Locked Doors and Chests

There are several ways to deal with locked doors and chests.

Using Keys

Keys will appear in some Quests and any specific rules for using them can be found in the Quest description. If you use a key, any traps are automatically bypassed and you can open the Door or Chest safely.

Great Keys are a Treasure item that may be discovered in a chest or obtained from specific Characters. You need a Great Key to open a Great door and any traps are automatically bypassed.

A Key can also be used to close a door, preventing enemies from passing through. Discard the key after using it.

Picking the Lock

A Character can try to open a locked Chest or Door by picking the lock. Make a DEX check with a difficulty depending on the object and quality of the items: the Encounter Chart for the Quest lists the Difficulty to unlock a locked Chest, while the Door chart for the Quest lists the Difficulty to unlock a locked Door.

If you succeed the check, then you successfully open the object.

If you fail, you can try again on your next turn, but each new attempt adds +1 to the difficulty of the check, (even if you try a different approach, like using a spell). However, on a fumbled check, the lock gets damaged beyond repair, so it can only be open by bashing it (see below).

Success or failure, picking a lock will always trigger any existing trap: if you haven't done so before (i.e., failed – or haven't tried – to detect the trap before), roll on the Door Trap or Chest Trap to determine it. Note that if you had already detected the trap, then all Characters affected by it get an extra +1 die to avoid its effects. Once activated, traps are generally gone, so you can safely try to pick the lock again.

For example A locked Chest Dif: 2 has been detected as trapped with a poison needle, but successive attempts to disarm it have raised the difficulty beyond the thief's DEX 4, so he decides to unlock it without disarming the Trap. He resolves the effects of the Trap (which he manages to avoid, thanks to the +1 bonus for already knowing the existence of the trap), and he rolls 4 dice to unlock it, but fails to get any successes! With his next Action, he attempts to open the Chest again. Since the trap has already been activated, it cannot affect him if he fails another time, but his previous failure has increased the difficulty to unlock that chest by 1. Have you ever seen an unluckiest Thief?

Bashing a Door or Chest

As a final resort, you can also try opening the chest or door by force. This makes a lot of noise, so any monsters in neighboring rooms are automatically on the Alert awareness level. Also, it increases their detection range to 4 tiles, instead of 2 (see Monster Movement, above).

To break it open, you will need to attack the chest or door and, in a single blow, get a number of successes equal to double the difficulty to unlock the chest/door. A Great Door can also be forced open. Unlike other attacks, two or more Heroes may combine their efforts, adding their ATK stats together and making a single attack roll. The attack happens on the last Hero's Action.

If the door or chest was trapped then the trap will activate on the first successful hit.

A fumble increases the number of successes needed to bash it by 1. It will also cause the destruction of any treasure inside a chest.

Optional Rules for Trap/Lock Resolution

One Check to Rule Them All: if you find yourself making too many checks to detect traps, disarm the trap, fumble and trigger the trap, then unlock the object, fail and try again, again, etc., and not having fun with it, then consider this variant rule for your next game. You make only one check, but the DEX difficulty shown in the Chest/Door chart is increased by 1. If you succeed, all traps and locks are gone. If you fail (or fumble), traps are activated, and the lock is beyond your ability to unlock. You can't even try to bash it, you will have to use a Key.

Treasure

Chests can have gold or other treasures stored inside. When a Chest is successfully opened the player whose Hero opened it makes a roll on the **Treasure Chart** to see what the Chest contained and gets to keep it. Check the Treasure Chart for the appropriate die to roll. Items such as keys, weapons, armor, gold, and gems are common types of treasure.

Some treasures are Unique: once found in a dungeon they cannot be found again. Treasure of this sort will be marked on the Treasure Chart as so, as well as the replacement item should you ever roll that entry again.

Party Inventory

Items that are shared by the whole group of Heroes are noted in the Party Inventory Sheet, found in the Appendix. It includes gold, valuables, recipes and properties.

Gold

Besides being found inside treasure chests, some Monsters also have an amount of gold they carry on them. When a Hero removes that Monster from the game, he gets the gold listed in its description.

All gold is pooled together and divided up among the Heroes when they return to town.

Valuables

Gems and other items that do not have a special use do not occupy an Inventory slot. Like Gold, these items are shared by all Heroes and are normally sold when the quest is over and they return to town – but some can be expended as reagents for magic item creation recipes the Heroes may possess. Details for crafting items can be found in the Spell Book.

Recipes

These are books with instructions or special knowledge that enables the party to create their own items or enchant the ones they own. They require specific items, reagents and/or gold to be completed. Any Hero can use item creation recipes, but some may call for a stat check or another requirement (like a Magic School).

Properties

Items that the Heroes cannot carry may be stored in a communal chest back in town. Starting Heroes can only store 4 items, but as they get richer they may rent rooms or buy properties to increase this space.

Hero Inventory

Both worn and carried items are allocated on slots in the Hero's Inventory in their individual Character Sheets. There are seven slots reserved for equipment, and four slots for items carried in pockets or bags. The backpack is a special item that, once acquired, expands a Hero's Inventory from 4 to 8 slots without taking up a slot itself.

Equipment

Equipment usually increases the Hero's stats, but some may grant special abilities and spells. The equipment slots are: Weapon, Shield, Armor and Attire.

Weapon and Shield are the Right and Left Hands slots. Two-handed weapons occupy both slots, so it's impossible to use a shield with them. A Hero may carry a second one-handed weapon in place of a Shield, allowing him to choose which one to attack with, without spending an Action to switch them.

Attire consists of a collection of accessories and worn magic items, like Helmets, Capes, Amulets, Boots, Gloves and Rings. Each Hero can equip up to 4 pieces of attire, otherwise their magic energies interfere with each other and none of them work. Attire bonuses do not stack: if two items grant a bonus to the same stat, consider only the highest bonus (or the worst penalty, in the case of cursed equipment; see below). Heroes can't wear two items on the same location (like, two helmets), but they can use two Rings, one on each hand.

Potions and Consumables

Consumables are single use items, like potions, grenades and whetstones, which can be used to provide various effects (healing, powerful attacks or stat bonuses), either permanent, instantaneous or with a set duration. Once used, they are discarded from the Hero's inventory.

Spellbooks

These books give access to new spells but they must be carried (each in a separate inventory slot) back to town before being added to one Hero's repertoire.

Alternatively, spellbooks can be used by any character to cast the spell within, but it must be discarded after such use, like a Consumable item. The Hero does not need to make a MAG check, but must have a MAG stat

equal or higher than the difficulty of the spell.

Though they cost a lot of money, some spellbooks may be bought in town.

Keys

Keys are used to open locks, either on Doors or Chests. They also automatically bypass any trap. Keys can never be bought in a town shop (though they can be sold), and like consumable items, they are discarded after being used. When a Quest is over, any unused key is discarded as well. There's no difference between a door and a chest key, but each occupy an item slot in a Hero's inventory.

You can also close a door with a key (which is discarded), to prevent Monsters from passing through.

One important item of Treasure is the **Great Key**. This is a special key that opens a Great Door that leads to the dungeon's Unique Rooms. Great Keys work with any Great Doors and it's possible to use them like normal keys, to open doors and chests, in case more than enough Great Keys have been found.

Cursed items

Cursed items are usually a piece of magic equipment that gives penalties. As soon as a Hero finds a cursed item (by rolling on the Treasure Chart), its dark magic forces him to equip it: he immediately switches his current item for the cursed one. The item is not lost; it goes in your inventory. You must forfeit a two handed weapon to carry a cursed shield, but you have the option of which attire you will discard for another). Cursed items cannot be removed without a proper spell or potion, or the help of the town priest.

Discarding Treasure

Sometimes a Hero cannot carry something that has been found. Perhaps they do not have room for it in their inventory, or it's the third broken dagger you found. For whatever reason if a Hero discards treasure or an item, it is gone forever.

Selling Treasure

When Heroes return to town, they may sell any item they do not wish to keep by half its listed price, except for Valuables (gems, art objects, reagents, etc) which will list their gold value in their description or Treasure table. If there's no price listed with the item, then it cannot be sold, only discarded.

Optional Rules for Experience Points

Gold Rush: in a competitive game, players keep gold and items for themselves, according to which chests they open and the monsters they fell, though Quest rewards are split evenly. Properties must be acquired separately by each Hero, but they cost ¼ of the total cost, and can only store ¼ of its capacity.

Experience Points

Overcoming challenges, like defeating Monsters, solving puzzles and completing Quests, award Heroes with Experience Points (XP). These points are never spent, they accumulate over the course of a Hero's life, and its total score determines his Character Level, according to the Advancement Table in the Character Book.

During the game, make note of all sources of XP, as detailed below:

- Add all the XP listed on the **Monsters** stats for every one the Heroes defeat.
- Successfully **Unlocking Doors/Chests** and **Disarming Traps** give experience points equal to 10 times the difficulty of the check (as listed on the Construction Charts).
- **Random Events** that present challenges to the Heroes may also award XP (as shown on the Event's description).
- **Tomes of Knowledge** are special books with no particular effect, but which can be used to gain bonus XP when studied back in town. Their entry in the Treasure table will list how many XP the book will award.
- Special Locations like **Libraries** may also give bonus XP once they are found, as specified by the Quest.
- Finally, a **Quest** may award Heroes with XP for tasks completed.

The next time the Heroes return to town, divide all Experience Points gained during the Quest among them. Write the total on your Character Sheet (adding with any previously earned XP), and check the Level Advancement Table on the Character Book to see if you have enough to Level Up.

You will find details about how to advance to the next Level in the Character Book.

Optional Rules for Experience Points

Shared Experience: XP can be tracked in a single pool, as a Party resource, like Gold. Instead of dividing the XP gained by the number of Heroes (4), consider that all Heroes Level Up together, when the entire group has enough XP to Level Up together (this is, equal to four times the amount required for one Hero to Level Up).

My kingdom for a Tutor: While in town, Gold can also be used on Training (like paying a tutor, doing research, donating to your faith, or even drinking and partying), which "converts" 10 Gold into 1 Experience Point for the party.

Appendix A Play Aids

Map Maker

						S						

Plot Counter

30	29	28	27	26	25	24	23	22	21	20	19	18	17	16	15	14	13	12	11
10	9	8	7	6	5	4	3	2	1	1	2	3	4	5	6	7	8	9	10
11	12	13	14	15	16	17	18	19	20	21	22	23	24	25	26	27	28	29	30

How to use the Map Maker & Plot Counter Sheet

You will need a copy of the Map Maker for each game you play. This is used to track the tiles & doors that you have placed to build the Dungeon. The following lists some suggestions for marking items.

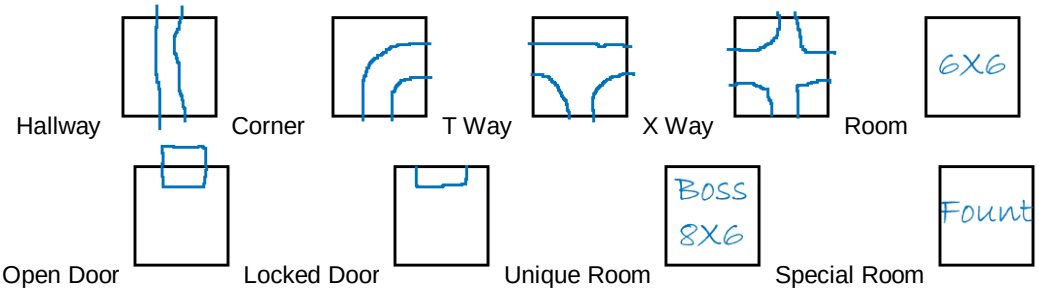

Doors that are known to be trapped can be marked with a T
You can also keep a track of any other details such as unopened chests and monsters you haven't killed.
There is no need to track their locations, just how many and any other details.

Here is a sample Map.

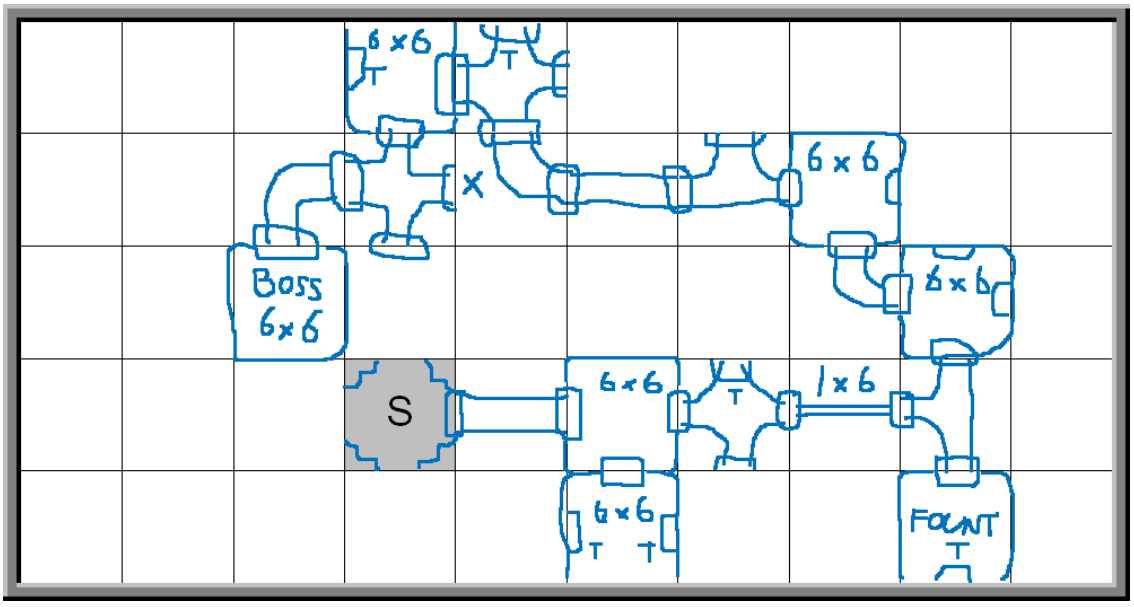

Note the **X** *where a doorway leads nowhere.*

You start the Plot counter at the first number of the time span and when you construct the first room cross off the next number. After each construction phase you cross off the next number until you reach the first pink 1. From now on, as well as crossing off the number, you also add it to the **Door Chart** Roll.

Here is the plot counter for the above map: Time Span 12 (6)

30	29	28	27	26	25	24	23	22	21	20	19	18	17	16	15	14	13	12	11
10	9	8	7	6	5	4	3	2	1	1	2	3	4	5	6	7	8	9	10

Flow Charts

Construction

1. Is the door a Great Door?
    - 1.1. Roll on the Unique Location Chart and place the matching tile
    - 1.2. Use the Description to place Monsters, Chests and other items on the tile
2. Roll on the Location Chart and place the matching tile
3. Roll on the Doorway Chart for each doorway and place the matching door markers
4. Is it a Special Location
    - 4.1. Use the Description to place Monsters, Chests and other items on the tile
5. Is it a Hallway?
    - 5.1. Roll on the Random Events Chart
6. Is it a Room?
    - 6.1. Roll on the Encounter Chart for Monsters and Chests
        - 6.1.1. Are there chests?
            - 6.1.1.1. Roll for the locations of the Chests and place any Chest markers
        - 6.1.2. Are there Monsters?
            - 6.1.2.1. Roll on the Monsters Chart for the type and number of monsters
            - 6.1.2.2. Roll for the locations of the Monsters and place them

Open Doors/Chests

1. Search for Traps (WIT check)
2. Roll on Door/Chest Trap chart
    - 2.1. if there is a trap
        - 2.1.1. If Detection failed: trap triggers
        - 2.1.2. If Detection succeeds: you can disarm trap
            - 2.1.2.1. Disarm Traps (DEX check)
            - 2.1.2.2. fail: trap triggers
            - 2.1.2.3. success: trap is removed
    - 2.2. if there's no trap
        - 2.2.1. Open Door/Chest

Game Round Summary

1. begin game round
    - 1.1. Hero Turn (for each Hero)
        - 1.1.1. start of turn effects
        - 1.1.2. perform 2 actions, player's choice
            - 1.1.2.1. move
            - 1.1.2.2. attack
            - 1.1.2.3. use item
            - 1.1.2.4. spell / ability
        - 1.1.3. end of turn effects
        - 1.1.4. pass play to next Hero, until all have taken their turn
    - 1.2. Monster Turn (for each Monster)
        - 1.2.1. start of turn effects
        - 1.2.2. perform 2 actions, acording to Law
            - 1.2.2.1. move
            - 1.2.2.2. attack
            - 1.2.2.3. spell / ability
        - 1.2.3. end of turn effects
        - 1.2.4. repeat for next Monster, until all have taken their actions

Character Sheets

NAME:		CONCEPT:	
ATK:	SPECIAL ABILITIES:		NOTES:
DEF:			
MAG:			
MOV:	SPELLS:		
LIF:			
WIT:			
DEX:			
RES:			
ARMOUR:		LEVEL:	
HAND 1:		HAND 2:	
ATTIRE:			
ITEM 1:		ITEM 2:	
ITEM 3:		ITEM 4:	
ITEM 5:		ITEM 6:	
ITEM 7:		ITEM 8:	

NAME:		CONCEPT:	
ATK:	SPECIAL ABILITIES:		NOTES:
DEF:			
MAG:			
MOV:	SPELLS:		
LIF:			
WIT:			
DEX:			
RES:			
ARMOUR:		LEVEL:	
HAND 1:		HAND 2:	
ATTIRE:			
ITEM 1:		ITEM 2:	
ITEM 3:		ITEM 4:	
ITEM 5:		ITEM 6:	
ITEM 7:		ITEM 8:	

Party Sheet

Party Name:		
Leader:	Recipes:	Properties:
Hero:		
Hero:		
Hero:		
Gold:		
Valuables:	Spare Weapons/Items/Attire:	